# TECHNICAL DATA SHEET

Burlington®
Yesterday's designs TODAY'S TECHNOLOGY

## Birkenhead Wye exposed thermostatic valve, rigid riser, curved arm, 9" shower rose & Soap basket

| | |
|---|---|
| [V4] | Wye Eposed Thermostatic Shower Valve (including ceramic lever for shower valve) |
| [V21] | Standard vertical riser (with one adjustable vertical riser wall bracket) |
| [V19] | Curved Shower arm for vertical riser mounting |
| [V17] | 9 Shower Rose |
| [V23] | Soap basket for vertical riser |
| [V3] | Birkenhead Valve Handle (single) |

## Product Specification

| | |
|---|---|
| **Finishes** | Chrome plated |
| **Product Type** | Traditional |
| **Material** | Bodies are of all brass construction |

## Additional Information

| System Pressure | .2 bar | .5 bar | 1.0 bar | 2.0 bar | 3.0 bar |
|---|---|---|---|---|---|
| Shower Rose | 5.00 | 9.50 | 10.30 | 11.50 | 14.00 |

## Guarantee

10 YEAR GUARANTEE

See our website for terms and conditions

## Compliance / Approvals
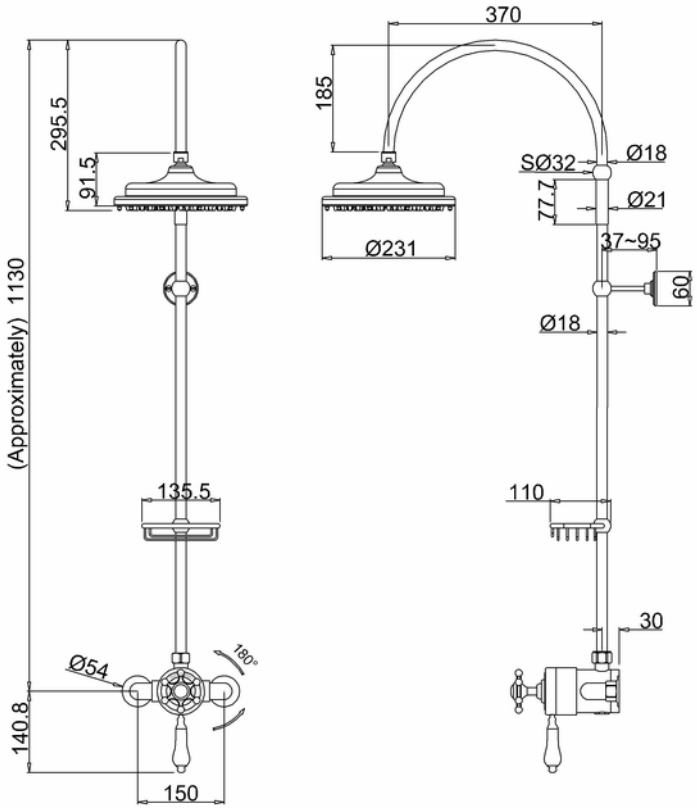
**BS EN 1287:1999**
Sanitary tapware. Low pressure thermostatic mixing valves. General technical specifications
**BS EN 1111:1999**
Sanitary tapware. Thermostatic mixing valves (PN 10). General technical specification