TECHNICAL DATA SHEET

Burlington®
Yesterday's designs TODAY'S TECHNOLOGY

Sarah & Chrome Wash Stand

[G7 2TH] Granite slab with basin - Rear back splash & two side splash backs, 2 tap hole
[T49A] 65cm Basin Wash Stand Chrome

Product Specification

Finishes	G7 Granite; T49 Chrome plated
Product Type	Traditional
Material	G7 Natural stone; T49 Bodies are of all brass construction.
Fixing	Supplied with an extra chrome plated domed screw.
Size	w 65cm x d 57.5cm
Overall Height	95.7cm
Tap Holes	1, 2 or 3

Additional Information

Guarantee

10 YEAR GUARANTEE

See our website for terms and conditions

Compliance / Approvals
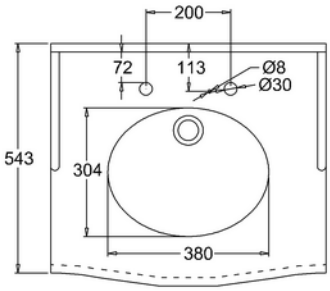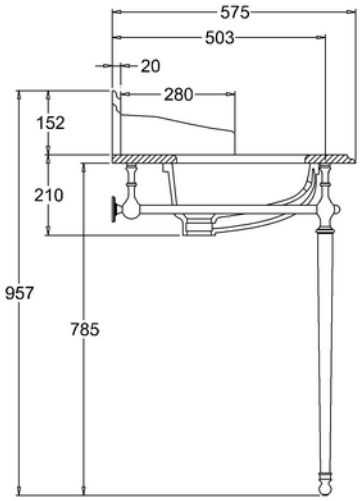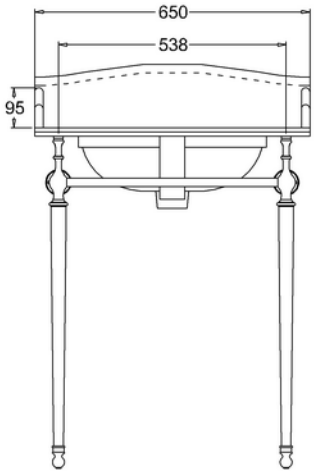
Chrome plated to **BS EN248:2002**
Sanitary tapware. General specification for electrodeposited coatings of Ni-Cr